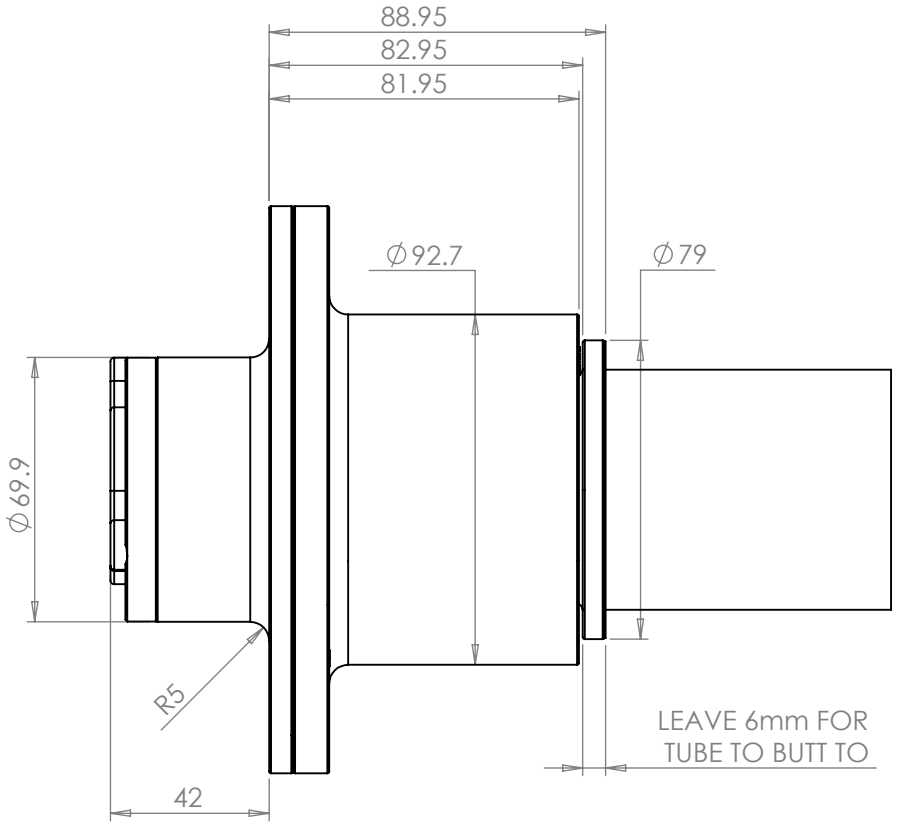

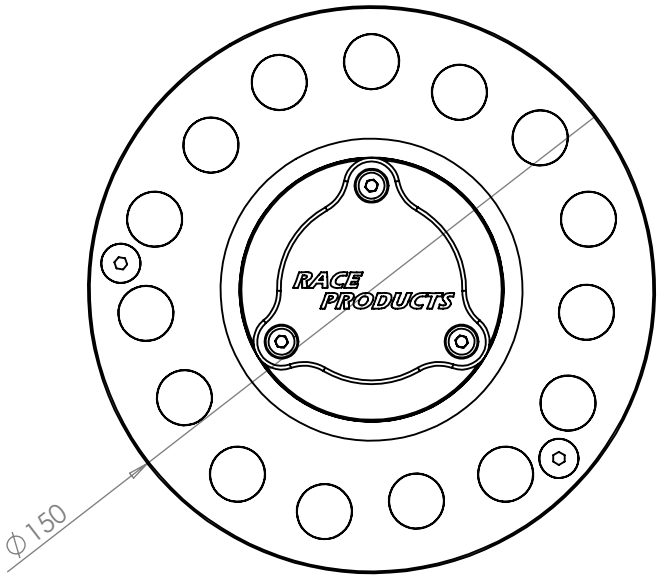

FINISH:	DO NOT SCALE DRAWING	REVISION A	
DEBUR AND BREAK ALL SHARP EDGES WITH .5mm FILLET UNLESS SPECIFIED	RACE PRODUCTS		

ISSUE	REVISION	NAME	DATE
A	INITIAL RELEASE	DC	10/04/13

ALL DIMENSIONS ARE IN MILLIMETERS UNLESS SPECIFIED

THIS DRAWING OR DESIGN IS STRICTLY CONFIDENTIAL AND REMAINS THE EXCLUSIVE PROPERTY OF BONNERGROVE PTY LTD AND MAY NOT BE USED OR COPIED WITHOUT THEIR WRITTEN CONSENT

GENERAL TOLERANCES
NO PLACES DEC. +/- 0.25
1 PLACES DEC. +/- 0.10
2 PLACES DEC. +/- 0.05
ANGULAR +/- 0.50
ANGULAR +/- 0.25

	NAME	SIGNATURE	DATE
DRAWN	DC		10/04/13
APPV'D			
QA			

MATERIAL:

WEIGHT:

DESCRIPTION. 1500-xx-S INSTALLATION

A4

PART NO.

DWG NO.

SCALE:1:2

SHEET 1 OF 1